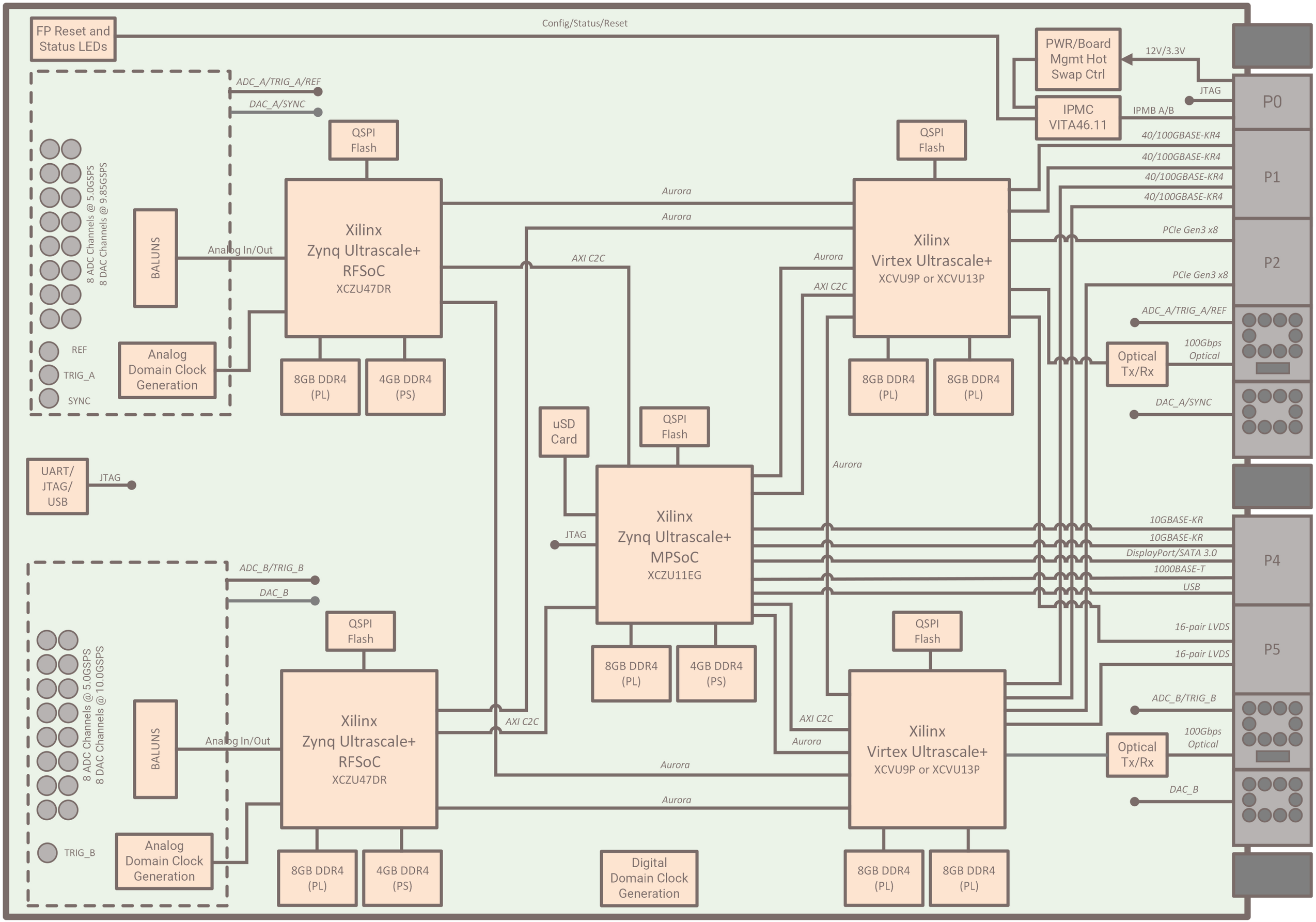
FP Reset and Status LEDs
Config/Status/Reset
PWR/Board Mgmt Hot Swap Ctrl
12V/3.3V
IPMC VITA46.11
JTAG
IPMB A/B
P0
P1
P2
P4
P5
40/100GBASE-KR4
40/100GBASE-KR4
40/100GBASE-KR4
40/100GBASE-KR4
PCIe Gen3 x8
PCIe Gen3 x8
ADC_A/TRIG_A/REF
DAC_A/SYNC
Optical Tx/Rx
100Gbps Optical
10GBASE-KR
10GBASE-KR
DisplayPort/SATA 3.0
1000BASE-T
USB
16-pair LVDS
16-pair LVDS
ADC_B/TRIG_B
DAC_B
Optical Tx/Rx
100Gbps Optical
ADC_A/TRIG_A/REF
DAC_A/SYNC
8 ADC Channels @ 5.0GSPS
8 DAC Channels @ 9.85GSPS
REF
TRIG_A
SYNC
BALUNS
Analog In/Out
Analog Domain Clock Generation
QSPI Flash
Xilinx Zynq Ultrascale+ RFSoC
XCZU47DR
8GB DDR4 (PL)
4GB DDR4 (PS)
Aurora
Aurora
AXI C2C
Aurora
AXI C2C
QSPI Flash
Xilinx Virtex Ultrascale+
XCVU9P or XCVU13P
8GB DDR4 (PL)
8GB DDR4 (PL)
Aurora
uSD Card
QSPI Flash
Xilinx Zynq Ultrascale+ MPSoC
XCZU11EG
JTAG
8GB DDR4 (PL)
4GB DDR4 (PS)
UART/ JTAG/ USB
JTAG
ADC_B/TRIG_B
DAC_B
8 ADC Channels @ 5.0GSPS
8 DAC Channels @ 10.0GSPS
TRIG_B
BALUNS
Analog In/Out
Analog Domain Clock Generation
QSPI Flash
Xilinx Zynq Ultrascale+ RFSoC
XCZU47DR
8GB DDR4 (PL)
4GB DDR4 (PS)
AXI C2C
Aurora
Aurora
Aurora
AXI C2C
QSPI Flash
Xilinx Virtex Ultrascale+
XCVU9P or XCVU13P
8GB DDR4 (PL)
8GB DDR4 (PL)
Digital Domain Clock Generation